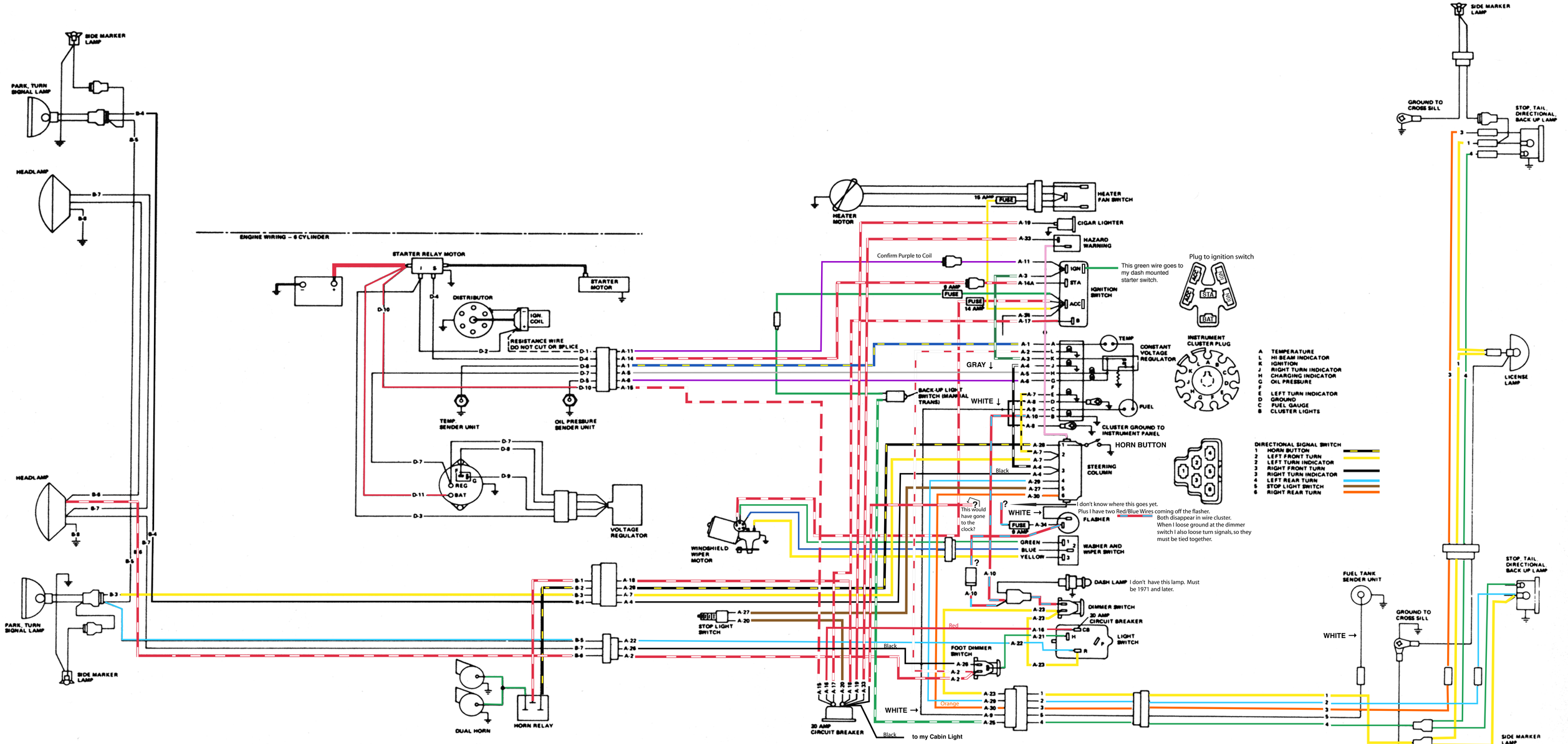

Based on 1971 and later commando

but Modified for my 1969 Jeepster Commando, main difference is side marker lights.